STMX00010 - REV. A | CAYENNE® CABINET CASTER INSTALLATION

1. Attach the four caster assemblies with the provided #10 X 1/2” Phillips sheet metal screws. Four screws needed for each caster assembly.
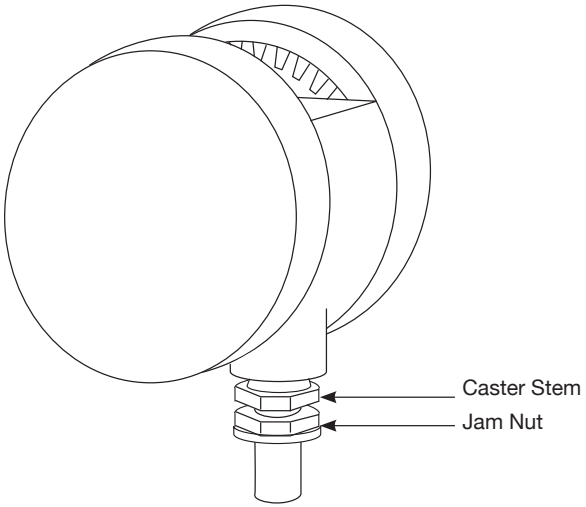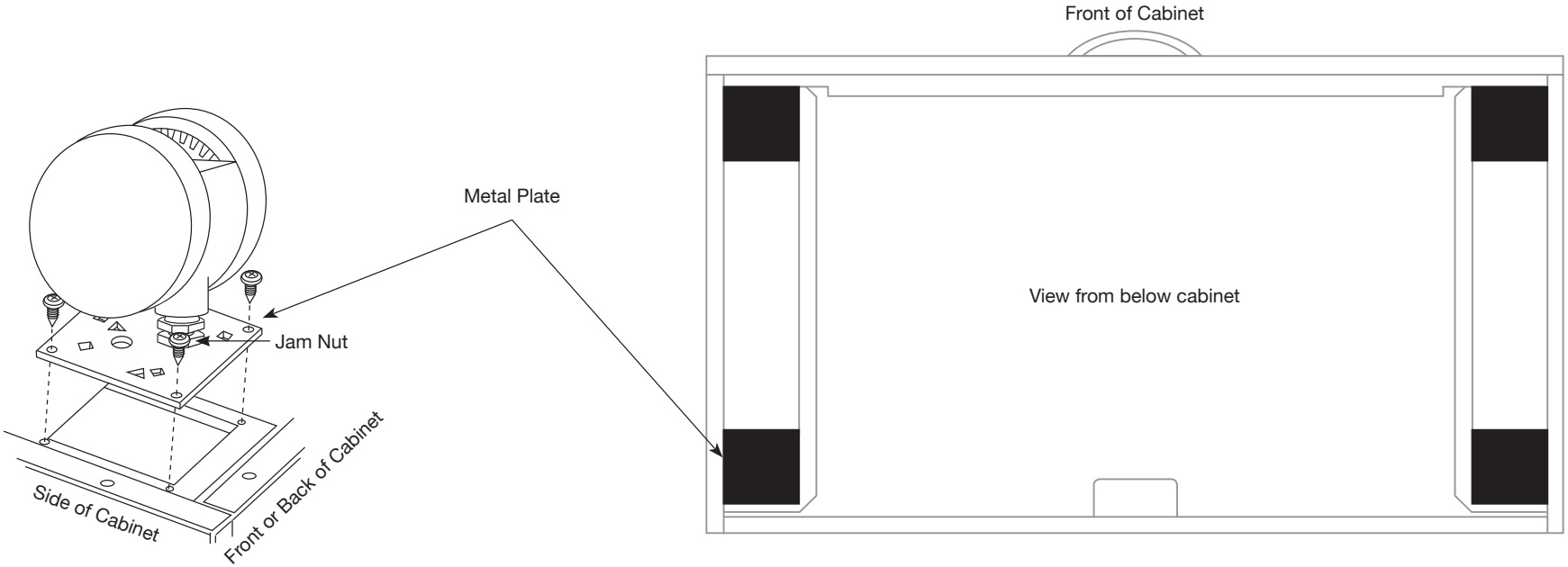
2. To level unit, turn caster stem out as needed. Then turn jam nut until it holds caster firmly in place.